Solar Powered LED Street Lighting System

WSL-G | all-in-one smart control

The Walsun WSL-G is our 2nd generation designed solar lighting product which is special for street illumination without the burden of rising electricity bills & increasing carbon footprint ,and meanwhile delivers sustainable lighting.

WALSUN

WSL-G Integrated Solar Streetlights

The uniquely integrated design incorporates the LED light engine, photovoltaic panel and long life LifePO4 battery into one lighting system, thereby significantly simplifying installation and reducing cost - no trenching, no cabling or on site assembly required. An ideal plug and play system for off-grid applications.Moreover,the product is designed with super stable structure based on fully 6063 al. covering,able to resist again typhoon 17.

Features

- High conversion(20%) solar panel (monocrystalline)
- -60 to 60° tilt angle adjustment optional
- Optical design: transmission >92%,beam 150°@70°
- LED design life of 80,000 hours.
- -10°C +60°C operating temperature.
- Wind resistance: 65m/s (K-2016W018)
- Post Top and side entry mounting.
- 4 to 6 meters mounting height, fits standard pole ø60mm.
- 5500K standard colour temperature, (custom for other colours).
- Built-in control: SMART intelligent lighting management system + MWS sensor

Advantages

- 6063 al. full covered housing,dual-coating finish
- Innovative LifePO4 battery allows more than 2000 deep cycles ensuring reduced maintenance and is eco-designed and fully recyclable.
- SMART lighting management system optimises lighting program and enhances battery lifespan.

Applications

Pathways, car parks, remote off-grid locations.

Luminaire Construction

- All-in-one - integrated LED Lighting System, Solar panel and long life battery.
- Luminaire body made from 6063 aluminum
- Lithium Iron Phosphate Battery, 12V.
- The entire system - IP67.
- LED Light - Luxeon,Lumileds

Light Distribution

Optical-grade material-PMMA is adopted to design the products lens, greatly ensure an ideal light transmission(92%).Meanwhile,the output light is well distributed as a second photometric tech measure. The proper light distribution is just designed based on long term test.

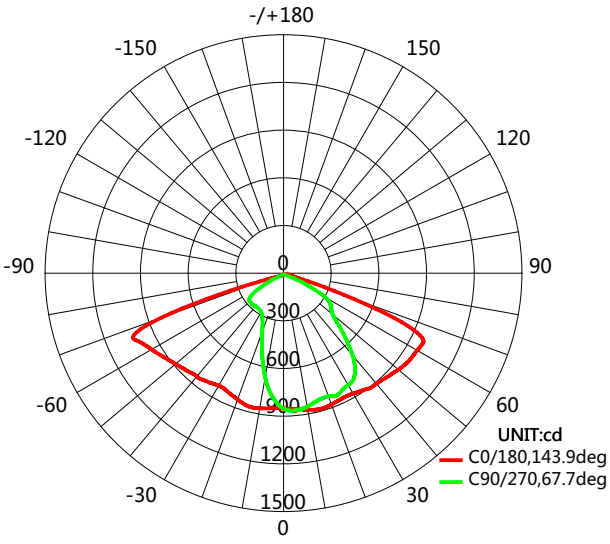

AVERAGE BEAM ANGLE(50%):105 8 DEG

Performance

The product offers a smart lighting management system with different lighting programs available with the sensor , such as:

Night and Day operating program.

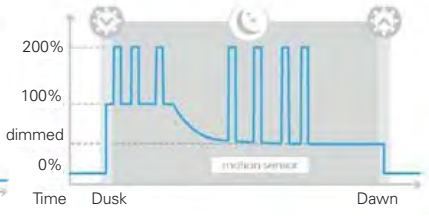

Motion sensor operating program (optional).

© All rights reserved by Walsun Industry,MGL Group

www.walsuns.com
sales@walsuns.com

Product Dimensions

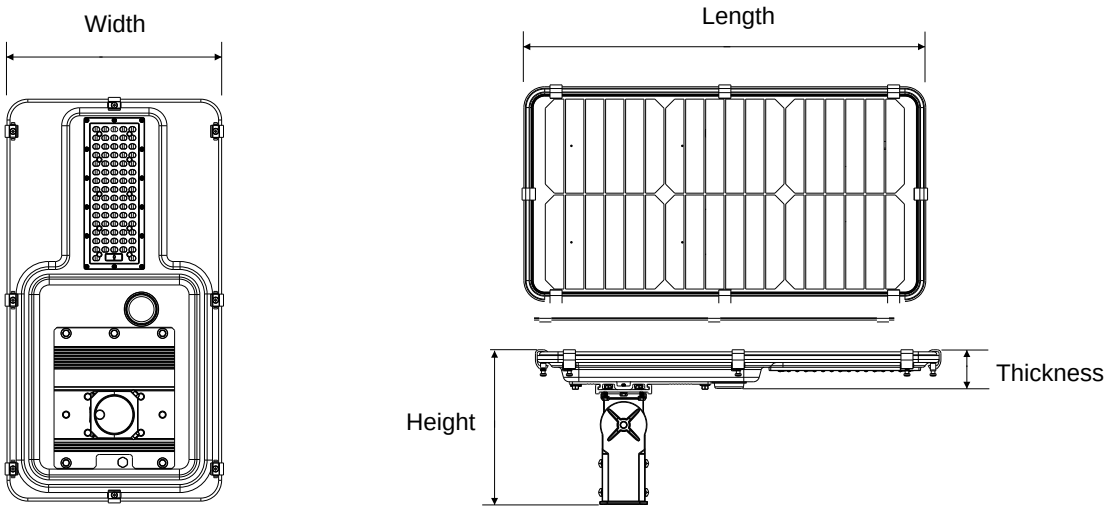

Product Dimension(the holder included)

Product	Length	Width	Height	Thickness
WSL-18G	538mm	283mm	177mm	
WSL-30G	677mm	367mm	254mm	50mm
WSL-75G	1063mm	526mm	259mm	

Packing Size(holders excluded)

Product	Length	Width	Height	Gross Weight
WSL-18G	590mm	345mm	140mm	7kg
WSL-30G	725mm	425mm	160mm	14kg
WSL-75G	1150mm	610mm	170mm	21kg

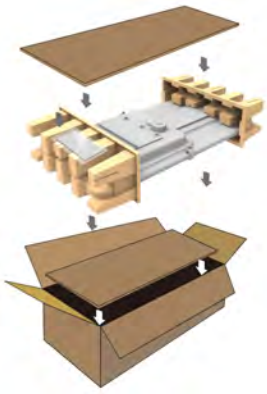

The Angle-adjustable holder's packing:

inner box	198*83*86mm
outer box	375*215*390mm
qty per ctn.	16pcs

Model #	Solar PV	LED Power	Total Flux	Color Temp.	Holder	Weight(Kg.)
WSL-18G	17.5W	8W	1300Lm	5500K	non-adjustable	5
WSL-30G	30W	15W	2500Lm	5500K	optional	11
WSL-75G	75W	30W	4500Lm	5500K	optional	19
WSL-75G1	75W	40W	5700Lm	5500K	optional	21

WSL-18G

WSL-30G

WSL-75G
WSL-75G1

LED Smart

80,000 HOURS | IP67 Waterproof | RoHS | 14kg MAX MASS | 5 years Warranty | CE Certified

Due to continual product development, information is subject to change without notification

WALSUN

© All rights reserved by Walsun Industry,MGL Group

www.walsuns.com
sales@walsuns.com