Specification Sheet

==========

Picture:

Name: ------- Flat LED Quadrate Wall Lamp

Code: ------- 1616

Finish: ------- Polished + Polishied Chrome

Main Material: --- Stainless steel + Aluminium

Shade Material: -- Fabric+PVC

Product size:

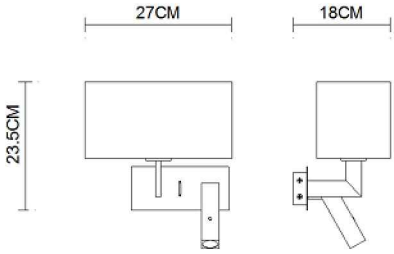

==========

Lamp Source: E27+LED

Wattage: 1x40W / 1x9W + 1x3W LED

Input Voltage: 220~240 V

Lumen: 340+121 lm

Switch: Toggle Switch + Micro Switch

Energy Efficiency Class:

Plug: Na

==========

Specification:

IP20

==========

Inner Box:

300*165*470(mm) 1pc

Outer Carton:

680*620*495(mm) 8pcs

Gross Weight: KGS

Net Weight: KGS

==========

Cable Length / Terminal Block:

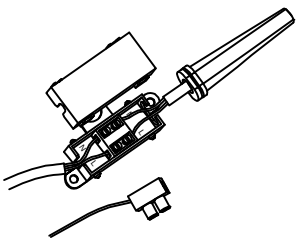

Installation Instruction:

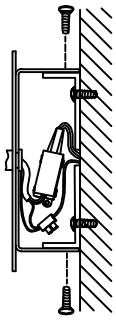
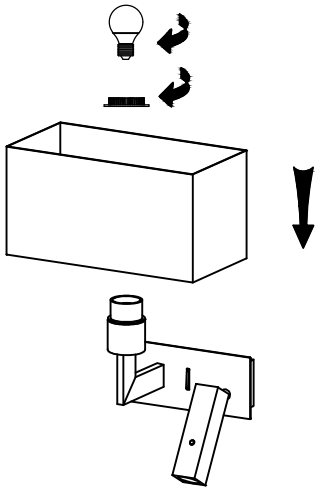
size:160x60xH:25