匠心之作
精密传动

代理经销商/Agent:

BENOY贝诺

MA 系列三相耐高温铝壳电机

Series three-phase high temperature resistant aluminum shell motor

DIRECTORY
目录

安装方式 1
MOUNTING ARRANGEMENTS

技术参数 2-3
TECHNICAL DATA

电机配件分布图 4-6
MOTORSPARE PART LIST/DRAWING

MA3系列2级能效电机 7-12
MA3 SERIES LEVEL 2 ENERGY EFFICIENCY MOTOR

公司简介
Company profile

东莞市贝诺智能科技有限公司成立于2003年。自成立以来，我们始终专注于精密传动部件，减速机和电机的制造加工。

Dongguan Benoy Intelligent Technology Co.Ltd was established in 2003.Since establishedwe always focus on precision transmission parts and reducers and motors manufacturing &processing.

公司秉持专业化的经营理念，基于统一管理标准，将国际标准品质和迅捷的服务奉献给全球客户。在中国广东东莞生产基地，通过三个工程师团队管理并开发国际需求市场。尤其注重质量管控。公司主要分为三个区域，在中国，意大利，和美国各设一个办事处，在这样的地域划分下，让全球客户了解贝诺，并方便贝诺为全球客户提供全方位的服务。

By adhering to professional operation principlethe company is dedicated to offer the original quality and convenient services to Chinese customers based on unified manadement standards.At the production base in Dongguan,Guangdong.China, we manage and develop the international demand market through three teams of enaineers. Particular attention is naid to aualify controthe comnanvis mainly dlvided into three regions, with one office each in Chinaltaly.and the United States.Under such geographical divisions. global customers can understand Benoy and it is convenient for Benoy to provide a full range of services to global customers.

全系列产品由全国减变速机动力学团队设计与装配、制造工场拥有中国产秦川数控蜗杆磨齿机，美国格里森(GLEASON)凤凰二代斜锥滚齿机，德国德马吉(DMG)车/铣复合加工中心，日本卡希富基(KASHIFUUK)6轴CNC滚齿机，大限(OKUMA)5轴数控加工中心，瑞一莱森豪尔(REISHAUER)高精度磨齿机:并配备齿轮检测中心、德国蔡司三坐标检测中心，强大的研发团队和ISO9001;2015质量管理体系和8S生产管理模式;务求让每台产品达到环球认证的安全信心保证!

Whole series of products by the national speed reduction motor design and assembly mechanical team works with chinese-made qinchuan CNC worm gear grinding machinetheGLEASON phoenix second generation(GLEASON)bevel gear hobbing machineGermanyDMG(DMG)car/milling complex processing center, Japan kashi rich base(KASHIFUJIK)6 axis CNC gear hobbing machine, large Wei(OKUMA) 5 axis nc machining center,Swiss, vauxhall(REISHAUER) high precision gear grinding machine; And equipped with gear testing center,Zeiss three-coordinate testing center in Germany, a strong research and development team and iso9001:2015 quality management system and 8S production management mode; Make every product to achieve global certification security confidence guarantee!

产品广泛应用于各种需减变速要求的柔性输送，刚性自动运输生产线等;如木工家具玻璃陶瓷机械、电镀超声波，机械手机器人、医疗装备制药机械，瓦楞纸箱高端印刷机械，食品包装灌装机械，弹簧激光设备、SMT电子产业机器、各种非标自动化以及轻工化工、工程机械装备、钢铁冶金环境保护、煤炭矿业汽车工业、港口建设等。

Products are widely used in various needs to reduce the requirements of flexible transmission,rigid automatic transport production lines; Such as carpentry furniture glass ceramic machinery,ultrasonic electroplating manipulator robot, medical equipment, pharmaceutical machinery, corrugated carton high-end printing machinery,food packaging filling machine,spring machine laser equipmentSMT electronic industry various non-standard automation and light chemical industry,engineering machinery and equipment,steel, metallurgy, environmental protection coal mining car industryport constructionetc.

更多产品详情敬请登录: www.benoygear.com
For more product detailsplease visit www.benoygear.com

WORKSHOP
生产车间

每一道工序，要求臻于至善。
Every step requires perfection.

TEST CENTER
检测中心

每一件产品，皆是匠心之作。

Every product is a work of ingenuity.

其效率指标达到IE1标准，安装尺寸根据IEC标准。

1) 极数：备有2POLE, 4极, 6极；频率：50HZ/60HZ
2) 功率：0.06kW ~ 15kW, 电压220/380, 400/660V
3) IP55, IP65保护, Class F级绝缘, 可耐155度高温
4) Class H级绝缘, 可耐180度以上高温
5) 基座MA56 ~ MA160, CCC, CE, EMC, SGS实验室等认证
6) 进口SKF高温轴承, 低振动低噪音, 保证运转畅顺
7) 使用条件环境, 海拔≤1000米, 温度-20°C-155°C,H级可达180°C以上。
8) 3kW及以下电机为Y连接方式, 4kW及以上电机为▲连接方式。
9) 冷却方式是IC411。
10) 广泛应用于灌装饮料机械, 包装机械, 贴标机, 陶瓷机械, 电镀超声设备, 涂装机械，电子设备等工业机械行业

安装方式 MOUNTING ARRANGEMENTS

Types	Basic type ofcostruction	Derived types of construction				
MA56-132	IM B3 IM 1001	IM V5 IM 1011	IM V6 IM 1031	IM B6 IM 1051	IM B7 IM 1061	IM B8 IM 1071
MA56-132	IM B35 IM 2001	IM V15 IM 2011	IM V36 IM 2031	IM 2051	IM 2061	IM 2071
MA56-132	IM B34 IM 2101	IM 2111	IM 2131	IM 2151	IM 2161	IM 2171
MA56-132	IM B5 IM 3001	IM V1 IM 3011	IM V6 IM 3031			
MA56-132	IM B14 IM 3601	IM V18 IM 3611	IM V19 IM 3631			

基本安装方式可能适用千所有的派生的安装方式。
1) 带(*)安装方式 ,IEC60034-7中未给予定义。
2) 有关IMV 6,IMB6,IM B8安装方式，欢迎询盘确认。

BENOY贝诺

MA 技术参数 TECHNICAL DATA

IE2

SPEED 3000RPM 2-POLE 50HZ

型号 Type	额定功率 Rated Output kW	额定转速 Rated Speed rpm	效率 Efficiency η% (IE2)	效率 75%负载 Efficiency at 75% load	效率 50%负载 Efficiency at 50% load	功率因数 Power factor cosΦ	额定电流 Rated current 380V A	额定转矩 Rated Torque Nm	堵转转矩/额定转矩 Ts/Tn	最大转矩/额定转矩 Tmax/Tn	堵转电流/额定电流 Is/In	转动惯量 Moment of inertia J(kgm²)	重量 Weight kg
MA56A2	0.09	2710	50.0*	49.7	45.0	0.70	0.35	0.32	1.8	2.0	4.0	-	3.2
MA56B2	0.12	2710	55.0*	56.2	53.2	0.70	0.43	0.42	1.8	2.0	4.0	-	3.4
MA63A2	0.18	2720	65.0*	64.5	59.6	0.73	0.58	0.63	2.2	2.2	5.5	-	3.9
MA63B2	0.25	2720	66.0*	65.6	61.4	0.76	0.76	0.88	2.2	2.2	5.5	-	4.4
MA63C2	0.33	2720	70.0*	70.3	67.1	0.81	0.99	1.30	2.2	2.2	6.1	-	4.7
MA71A2	0.37	2760	70.0*	70.9	68.9	0.81	0.99	1.28	2.2	2.2	6.1	0.0005	6.2
MA71B2	0.55	2820	73.0*	73.9	71.9	0.82	1.40	1.86	2.2	2.3	6.1	0.00063	6.3
MA71C2	0.75	2820	74.0	74.2	71.4	0.82	1.88	2.54	2.2	2.3	6.1	0.00073	6.5
MA80A2	0.75	2845	74.0	74.2	71.4	0.83	1.83	2.52	2.4	2.5	6.1	0.00083	8.3
MA80B2	1.1	2840	76.0	76.8	75.3	0.84	2.58	3.7	2.5	2.5	7.0	0.0010	9.0
MA80C2	1.5	2840	77.0	78.1	76.6	0.84	3.48	5.04	2.5	2.5	7.0	0.0012	10.0
MA90S2	1.5	2840	78.0	78.7	76.7	0.84	3.43	5.04	2.7	2.8	7.0	0.0012	12.5
MA90L2	2.2	2840	80.0	80.8	79.5	0.85	4.85	7.4	2.5	2.8	7.0	0.0014	14.0
MA90LB2	3.0	2840	81.0	81.4	79.4	0.86	6.46	10.09	2.5	2.8	7.0	0.00145	16.0
MA100LA2	3.0	2870	82.0	82.1	80.3	0.87	6.31	9.98	2.2	2.5	7.5	0.0029	20.5
MA100LC2	4.0	2880	84.0	84.8	84.1	0.88	8.12	13.26	2.3	2.5	7.5	0.0039	28.0
MA112M2	4.0	2880	84.0	84.8	84.1	0.88	8.12	13.26	2.3	2.3	7.5	0.0050	26.0
MA112MC2	5.5	2900	85.0	85.0	83.5	0.88	11.0	18.17	2.3	2.3	7.5	0.0069	33.0
MA132SA2	5.5	2910	85.0	85.0	83.5	0.88	11.0	18.11	2.2	2.5	7.5	0.0104	40.0
MA132SB2	7.5	2905	86.3	86.6	85.6	0.88	14.9	24.66	2.2	2.4	7.5	0.0121	44.0
MA132ML2	9.2	2930	89.0	89.1	88.2	0.89	13.5	29.59	2.3	3.3	8.5	0.0270	43.0
MA132MC2	11.0	2910	87.8	87.4	85.9	0.89	22.0	36.10	2.2	2.4	7.5	0.0178	65.0

SPEED 1500RPM 4-POLE 50HZ

型号 Type	额定功率 Rated Output kW	额定转速 Rated Speed rpm	效率 Efficiency η% (IE2)	效率 75%负载 Efficiency at 75% load	效率 50%负载 Efficiency at 50% load	功率因数 Power factor cosΦ	额定电流 Rated current 380V A	额定转矩 Rated Torque Nm	堵转转矩/额定转矩 Ts/Tn	最大转矩/额定转矩 Tmax/Tn	堵转电流/额定电流 Is/In	转动惯量 Moment of inertia J(kgm²)	重量 Weight kg
MA56A4	0.06	1330	46.0*	42.0	35.5	0.55	0.32	0.43	1.4	2.0	4.0	-	3.2
MA56B4	0.09	1330	50.0*	49.2	43.0	0.63	0.39	0.65	1.8	2.0	4.0	-	3.4
MA63A4	0.12	1340	57.0*	57.1	52.6	0.72	0.44	0.86	1.8	2.0	4.4	-	4.0
MA63B4	0.18	1340	58.0*	59.5	56.4	0.73	0.65	1.28	1.8	2.0	4.4	-	4.5
MA63C4	0.22	1340	58.0*	58.4	54.7	0.73	0.79	1.57	1.8	2.0	4.4	-	4.9
MA71A4	0.25	1345	65.0*	65.1	61.3	0.74	0.79	1.78	2.1	2.2	5.2	0.0011	6.1
MA71B4	0.37	1340	67.0*	68.2	65.7	0.75	1.12	2.64	2.1	2.2	5.2	0.0012	6.7
MA71C4	0.55	1390	71.0*	72.4	70.6	0.75	1.57	3.78	2.2	2.5	5.3	0.0016	8.2
MA80A4	0.55	1390	71.0*	72.4	70.6	0.75	1.57	3.78	2.2	2.5	5.3	0.0013	8.9
MA80B4	0.75	1380	72.6	73.3	71.2	0.76	2.05	5.19	2.3	2.5	5.3	0.0015	9.6
MA80C4	1.1	1390	75.7	77.3	76.1	0.76	2.89	7.56	2.3	2.5	6.0	0.0019	12.2
MA90S4	1.1	1390	75.7	77.3	76.1	0.77	2.89	7.56	2.3	2.5	6.0	0.002	12.5
MA90L4	1.5	1400	78.0	79.4	78.3	0.78	3.70	10.31	2.3	2.5	6.0	0.003	15.0
MA90LB4	2.2	1415	80.0	80.8	79.5	0.82	5.16	14.85	2.3	2.5	7.0	0.0039	19.5
MA100LA4	2.2	1415	80.0	80.8	79.5	0.81	5.16	14.85	2.3	2.5	7.0	0.0054	19.2
MA100LB4	3.0	1415	82.0	82.6	81.1	0.82	6.78	20.25	2.3	2.5	7.0	0.0067	23.0
MA100LC4	4.0	1430	83.9	84.6	83.5	0.83	8.82	26.71	2.3	2.5	7.0	0.0069	25.9
MA112M4	4.0	1440	83.9	84.6	83.5	0.83	8.82	26.71	2.3	2.5	7.0	0.0091	29.0
MA112MC4	5.5	1445	85.0	85.6	84.6	0.83	11.6	36.35	2.3	2.5	7.0	0.0117	37.5
MA132S4	5.5	1445	85.0	85.6	84.6	0.83	11.8	36.35	2.3	2.5	7.0	0.0205	43.5
MA132M4	7.5	1445	86.4	87.0	86.3	0.84	15.6	49.57	2.3	2.5	7.0	0.0296	53.5
MA132ML4	9.2	1460	89.6	89.4	88.9	0.81	14.9	60.20	3.0	3.1	8.0	0.0480	58.0
MA132MC4	11.0	1460	87.9	87.9	86.6	0.84	22.6	71.95	2.2	2.3	7.0	0.0326	75.6

MA 技术参数 TECHNICAL DATA

IE2

SPEED 1000RPM 6-POLE 50HZ

型号 Type	额定功率 Rated Output kW	额定转速 Rated Speed rpm	效率 Efficiency η% (IE2)	效率 75%负载 Efficiency at 75% load	效率 50%负载 Efficiency at 50% load	功率因数 Power factor cosΦ	额定电流 Rated current 380V A	额定转矩 Rated Torque Nm	堵转转矩/额定转矩 Ts/Tn	最大转矩/额定转矩 Tmax/Tn	堵转电流/额定电流 Is/In	转动惯量 Moment of inertia J(kgm²)	重量 Weight kg
MA63A6	0.09	860	48.0*	43.9	34.0	0.59	0.46	1.0	1.9	2.0	4.0	-	4.5
MA63B6	0.12	860	51.5*	48.0	40.2	0.59	0.60	1.33	1.9	2.0	4.0	-	5.6
MA71A6	0.18	860	56.0*	55.9	50.5	0.66	0.74	2.0	1.9	2.0	4.0	0.0011	6.4
MA71B6	0.25	860	59.0*	59.2	55.0	0.66	0.95	2.78	1.9	2.0	4.0	0.0012	6.5
MA80A6	0.37	885	62.0*	61.2	56.4	0.70	1.30	3.99	2.0	2.1	4.7	0.0016	8.5
MA80B6	0.55	885	65.0*	65.2	61.8	0.72	1.79	5.94	2.0	2.1	4.7	0.002	9.2
MA90S6	0.75	915	70.0	70.8	68.3	0.72	2.29	7.83	2.0	2.2	5.5	0.003	12.0
MA90L6	1.1	915	72.9	73.8	71.6	0.73	3.16	11.48	2.0	2.2	5.5	0.004	14.0
MA100LA6	1.5	920	75.5	76.8	75.1	0.75	4.00	15.57	2.1	2.2	5.5	0.0069	19.5
MA112M6	2.2	935	78.4	79.3	77.8	0.76	5.57	22.47	2.2	2.2	6.5	0.0071	28.0
MA132S6	3.0	960	80.0	80.3	78.6	0.76	7.40	29.84	2.2	2.8	6.5	0.0274	38.0
MA132MA6	4.0	960	81.5	81.8	80.2	0.76	9.75	39.79	2.4	2.9	6.5	0.0343	45.0
MA132MB6	5.5	960	83.3	84.0	83.1	0.77	12.9	54.71	2.4	2.8	6.5	0.0431	54.0

SPEED 750RPM 8-POLE 50HZ

型号 Type	额定功率 Rated Output kW	额定转速 Rated Speed rpm	效率 Efficiency η% (IE2)	效率 75%负载 Efficiency at 75% load	效率 50%负载 Efficiency at 50% load	功率因数 Power factor cosΦ	额定电流 Rated current 380V A	额定转矩 Rated Torque Nm	堵转转矩/额定转矩 Ts/Tn	最大转矩/额定转矩 Tmax/Tn	堵转电流/额定电流 Is/In	转动惯量 Moment of inertia J(kgm²)	重量 Weight kg
MA71A8	0.09	635	39.0*	35.9	29.3	0.49	0.72	1.35	1.8	2.0	2.9	-	6.5
MA71B8	0.12	635	48.0*	45.8	39.5	0.49	0.78	1.80	1.8	2.0	2.9	-	7.5
MA80A8	0.18	645	51.0*	50.5	44.7	0.61	0.88	2.67	1.8	2.0	2.9	0.0018	8.3
MA80B8	0.25	645	54.0*	53.9	48.4	0.61	1.15	3.7	1.8	2.0	2.9	0.0021	9.0
MA90S8	0.37	670	62.0*	61.8	57.1	0.61	1.56	5.27	2.9	2.3	3.2	0.0030	12.0
MA90L8	0.55	670	63.0*	63.3	59.2	0.61	2.21	7.84	2.0	2.3	3.2	0.0040	15.0
MA100LA8	0.75	680	66.7	66.5	62.2	0.67	2.43	10.46	1.8	2.2	4.7	0.0063	16.4
MA100LB8	1.1	680	69.9	70.8	68.0	0.69	3.36	15.22	1.8	2.2	5.0	0.0097	21.8
MA112M8	1.5	700	73.0	73.1	70.1	0.69	4.40	19.62	2.0	2.5	5.0	0.012	29.0
MA132S8	2.2	710	76.1	76.3	73.9	0.71	6.04	29.59	1.8	2.5	6.0	0.029	39.0
MA132M8	3.0	710	78.2	79.1	77.4	0.73	7.90	40.35	1.8	2.4	6.0	0.038	45.0

BENOY贝诺

电机配件分布图 MOTORSPARE PART LIST/DRAWING

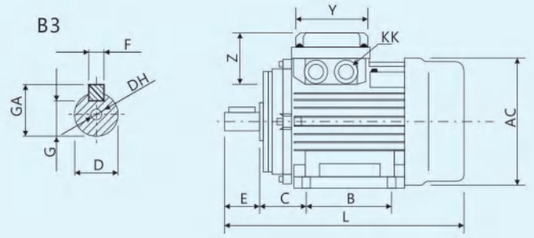

机座号 Frame size	安装尺寸 Mounting dimensions(mm)																外型尺寸 Overall dimensions(mm)							XxYxZ(mm)
	A	AA	AB	AC	AD	B	C	D	DH	E	F	G	H	R	K	KK	L	M	N	P	S	T	GA	
56	90	22.5	110	110	96	71	36	9	M4X10	20	3	7.2	56	0 ±1.5	7	M18X1.5	183	100	80	120	7	3	10.2	92X92X38
63	100	26	122	122	99	80	40	11	M4X10	23	4	8.5	63	0 ±1.5	7	M18X1.5	218	115	95	140	9	3	12.5	92X92X38
71	112	26	136	138	109	90	45	14	M5X12	30	5	11	71	0 ±1.5	7	M18X1.5	251	130	110	160	9	3.5	16	103X103X38
80	125	30	154	157	112	100	50	19	M6X16	40	6	15.5	80	0 ±1.5	10	M20X1.5	286	165	130	200	12	3.5	21.5	110X110X35.5
90S	140	34	174	175	120	100	56	24	M8X19	50	8	20	90	0 ±1.5	10	M20X1.5	320	165	130	200	12	3.5	27	110X110X35.5
90L	140	34	174	175	120	125	56	24	M8X19	50	8	20	90	0 ±1.5	10	M20X1.5	335	165	130	200	12	3.5	27	110X110X35.5
100L	160	39	194	196	139	140	63	28	M10X22	60	8	24	100	0 ±2.0	12	M20X1.5	377	215	180	250	15	4	31	110X110X35.5
112M	190	39	224	220	156	140	70	28	M10X22	60	8	24	112	0 ±2.0	12	M20X1.5	395	215	180	250	15	4	31	144X144X44
132S	216	48	256	260	185	140	89	38	M12X28	80	10	33	132	0 ±2.0	12	M25X1.5	472	265	230	300	15	4	41	144X144X44
132M	216	48	256	260	185	178	89	38	M12X28	80	10	33	132	0 ±2.0	12	M25X1.5	510	265	230	300	15	4	41	144X144X44

注:R=0为凸缘配合面到轴伸肩离的距离。

R=0 Distance from flange to shaft shoulder

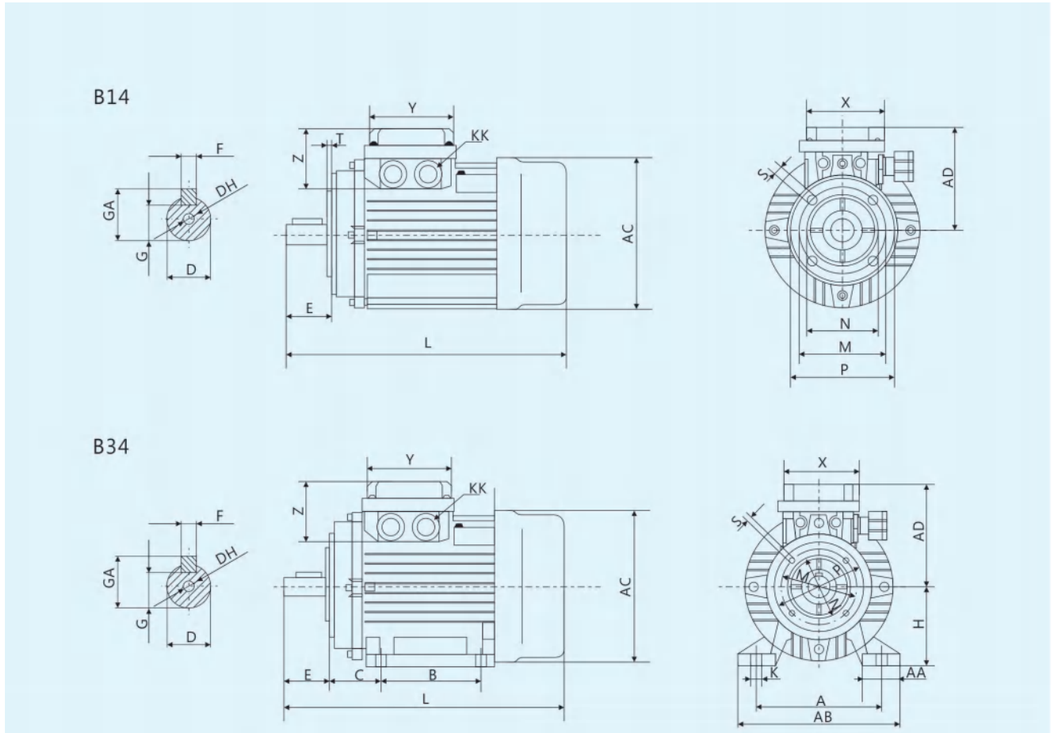

机座号 Frame size	安装尺寸 Mounting dimensions(mm)															外型尺寸 Overall dimensions(mm)							XxYxZ(mm)
	A	AA	AB	AC	AD	B	C	D	DH	E	F	G	H	K	KK	L	M	N	P	S	T	GA	
56	90	22.5	110	110	96	71	36	9	M4X10	20	3	7.2	56	7	M18X1.5	189	65	50	80	M5	3	10.2	92X92X38
63	100	26	122	122	99	80	40	11	M4X10	23	4	8.5	63	7	M18X1.5	218	75	60	90	M5	3	12.5	92X92X38
71	112	26	136	138	109	90	45	14	M5X12	30	5	11	71	7	M18X1.5	250	85	70	105	M6	3.5	16	103X103X38
80	125	30	154	157	112	100	50	19	M6X16	40	6	15.5	80	10	M20X1.5	278	100	80	120	M6	3.5	21.5	110X110X35.5
90S	140	34	174	175	120	100	56	24	M8X19	50	8	20	90	10	M20X1.5	335	115	95	140	M8	3.5	27	110X110X35.5
90L	140	34	174	175	120	125	56	24	M8X19	50	8	20	90	10	M20X1.5	335	115	95	140	M8	3.5	27	110X110X35.5
100L	160	39	194	196	139	140	63	28	M10X22	60	8	24	100	12	M20X1.5	377	130	110	160	M8	4	31	110X110X35.5
112M	190	39	224	220	156	140	70	28	M10X22	60	8	24	112	12	M20X1.5	395	130	110	160	M8	4	31	144X144X44
132S	216	48	256	260	185	140	89	38	M12X28	80	10	33	132	12	M25X1.5	472	165	130	200	M10	4	41	144X144X44
132M	216	48	256	260	185	178	89	38	M12X28	80	10	33	132	12	M25X1.5	510	165	130	200	M10	4	41	144X144X44

注:R=0为凸缘配合面到轴伸肩离的距离.

R=0 Distance from flange to shaft shoulder

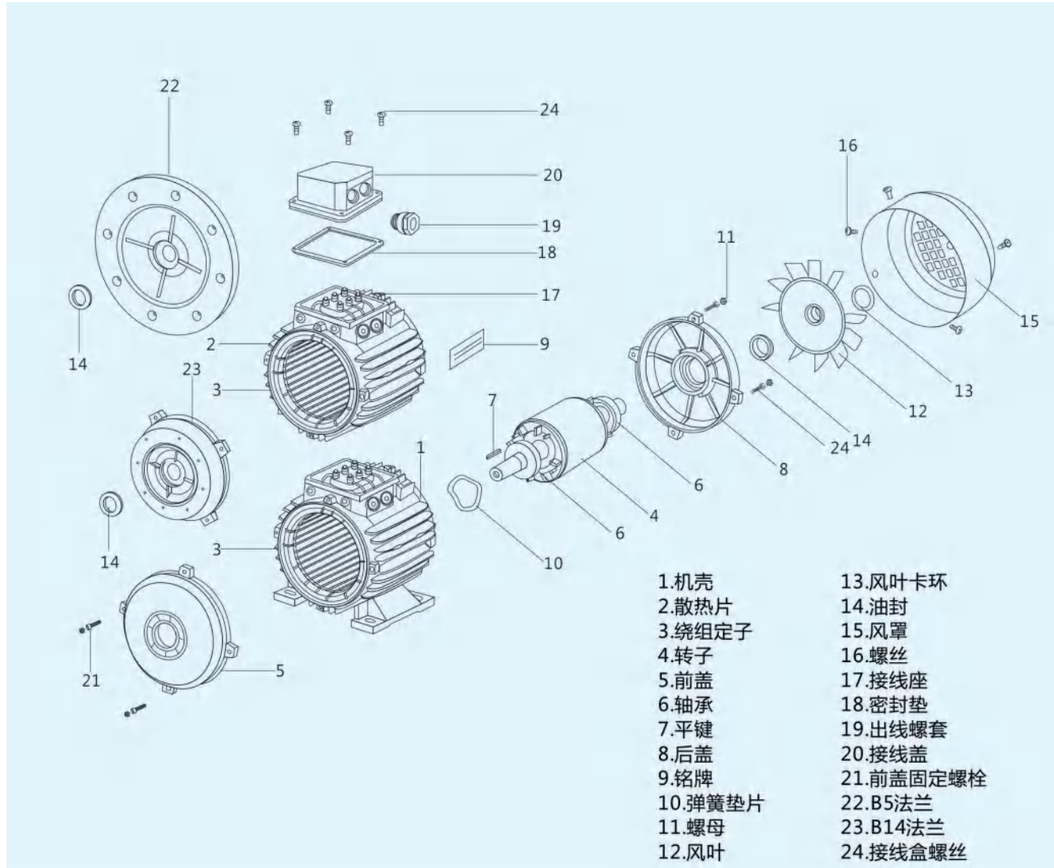

Frame size	Driving End Bearings	Non driving End Bearings	Oil Seal
56	6201 2RS/C3	6201 2RS/C3	ϕ1 2Xϕ22X5
63	6201 2RS/C3	6201 2RS/C3	ϕ12Xϕ22X7
71	6202 2RS/C3	6202 2RS/C3	ϕ15Xϕ25X7
80	6204 2RS/C3	6204 2RS/C3	ϕ20Xϕ30X7
90	6205 2RS/C3	6205 2RS/C3	ϕ25Xϕ37X7
100	6206 2RS/C3	6206 2RS/C3	ϕ30Xϕ42X7
112	6206 2RS/C3	6206 2RS/C3	ϕ30Xϕ42X7
132	6208 2RS/C3	6208 2RS/C3	ϕ40Xϕ58X8

MA3 IE3(2级能效 GB2)技术参数 TECHNICAL DATA

SPEED 3000RPM 2-POLE 50HZ

型号 Type	额定功率 Rated Output		额定转速 Rated Speed rpm	效率 Efficiency η% (IE3)	效率 75%负载 Efficiency at 75% load	效率 50%负载 Efficiency at 50% load	功率因数 Power factor cosΦ	额定电流 Rated current A			额定转矩 Rated Torque Nm	堵转转矩/额定转矩 Ts/Tn	最大转矩/额定转矩 Tmax/Tn	堵转电流/额定电流 Is/In	重量 Weight kg
	kW	HP						380V	400V	415V					
MA3-562-2	0.12	0.18	2760	60.8	60.8	59.6	0.72	0.42	0.40	0.38	0.42	2.1	2.2	5.2	5.2
MA3-631-2	0.18	0.25	2730	65.9	65.9	64.6	0.80	0.52	0.49	0.47	0.63	2.2	2.2	5.5	6.1
MA3-632-2	0.25	0.37	2730	69.7	69.7	68.3	0.81	0.67	0.64	0.62	0.87	2.2	2.2	5.5	6.4
MA3-711-2	0.37	0.5	2750	73.8	73.8	72.3	0.81	0.94	0.89	0.86	1.28	2.2	2.2	6.1	6.8
MA3-712-2	0.55	0.75	2750	77.8	77.8	76.2	0.82	1.31	1.24	1.20	1.91	2.3	2.3	6.1	7.9
MA3-801-2	0.75	1	2880	80.7	80.7	79.1	0.82	1.72	1.64	1.58	2.49	2.3	2.3	7.0	8.8
MA3-802-2	1.1	1.5	2880	82.7	82.7	81.0	0.83	2.43	2.31	2.23	3.65	2.2	2.3	7.3	9
MA3-90S-2	1.5	2	2895	84.2	84.2	82.5	0.84	3.22	3.06	2.95	4.95	2.2	2.3	7.6	13.5
MA3-90L-2	2.2	3	2895	85.9	85.9	84.2	0.85	4.58	4.35	4.19	7.26	2.2	2.3	7.6	17
MA3-100L-2	3	4	2895	87.1	87.1	85.4	0.87	6.02	5.71	5.51	9.90	2.2	2.3	7.8	23.2
MA3-112M-2	4	5.5	2905	88.1	88.1	86.3	0.88	7.84	7.45	7.18	13.1	2.2	2.3	8.3	40
MA3-132S1-2	5.5	7.5	2930	89.2	89.2	87.4	0.88	10.6	10.1	9.75	17.9	2.0	2.3	8.3	42
MA3-132S2-2	7.5	10	2930	90.1	90.1	88.3	0.88	14.4	13.7	13.2	24.4	2.0	2.3	7.9	48
MA3-160M1-2	11	15	2945	91.2	91.2	89.4	0.89	20.6	19.6	18.9	35.7	2.0	2.3	8.1	83
MA3-160M2-2	15	20	2945	91.9	91.9	90.1	0.89	27.9	26.5	25.5	48.6	2.0	2.3	8.1	94
MA3-160L-2	18.5	25	2940	92.4	92.4	90.6	0.89	34.2	32.5	31.3	60.1	2.0	2.3	8.2	106.5
MA3-180M-2	22	30	2955	92.7	92.7	90.8	0.89	40.5	38.5	37.1	71.1	2.0	2.3	8.2	140

SPEED 1500RPM 4-POLE 50HZ

型号 Type	额定功率 Rated Output		额定转速 Rated Speed rpm	效率 Efficiency η% (IE3)	效率 75%负载 Efficiency at 75% load	效率 50%负载 Efficiency at 50% load	功率因数 Power factor cosΦ	额定电流 Rated current A			额定转矩 Rated Torque Nm	堵转转矩/额定转矩 Ts/Tn	最大转矩/额定转矩 Tmax/Tn	堵转电流/额定电流 Is/In	重量 Weight kg
	kW	HP						380V	400V	415V					
MA3-631-4	0.12	0.18	1320	64.8	64.8	63.5	0.72	0.39	0.37	0.36	0.87	2.1	2.2	4.4	4.8
MA3-632-4	0.18	0.25	1320	69.9	69.9	68.5	0.73	0.54	0.51	0.49	1.30	2.1	2.2	4.4	5.3
MA3-711-4	0.25	0.37	1340	73.5	73.5	72.0	0.74	0.70	0.66	0.64	1.78	2.1	2.2	5.2	6.8
MA3-712-4	0.37	0.5	1340	77.3	77.3	75.8	0.75	0.97	0.92	0.89	2.64	2.1	2.2	5.2	7.7
MA3-801-4	0.55	0.75	1400	80.8	80.8	79.2	0.75	1.38	1.31	1.26	3.75	2.4	2.3	5.2	9.1
MA3-802-4	0.75	1	1420	82.5	82.5	80.9	0.75	1.84	1.75	1.69	5.04	2.3	2.3	6.6	11.1
MA3-90S-4	1.1	1.5	1445	84.1	84.1	82.4	0.76	2.61	2.48	2.39	7.27	2.3	2.3	6.8	15
MA3-90L-4	1.5	2	1445	85.3	85.3	83.6	0.77	3.47	3.3	3.18	9.91	2.3	2.3	7.0	19
MA3-100L1-4	2.2	3	1450	86.7	86.7	85.0	0.81	4.76	4.52	4.36	14.6	2.3	2.3	7.6	25.4
MA3-100L2-4	3	4	1450	87.7	87.7	85.9	0.82	6.34	6.02	5.8	20.0	2.3	2.3	7.6	30.5
MA3-112M-4	4	5.5	1450	88.6	88.6	86.8	0.82	8.37	7.95	7.66	26.5	2.2	2.3	7.8	37
MA3-132S-4	5.5	7.5	1460	89.6	89.6	87.8	0.83	11.2	10.7	10.3	36.0	2.0	2.3	7.9	48.5
MA3-132M-4	7.5	10	1460	90.4	90.4	88.6	0.84	15.0	14.3	13.7	49.1	2.0	2.3	7.5	60
MA3-160M-4	11	15	1465	91.4	91.4	89.6	0.85	21.5	20.4	19.7	71.7	2.2	2.3	7.7	92.5
MA3-160L-4	15	20	1465	92.1	92.1	90.3	0.86	28.8	27.3	26.3	97.8	2.2	2.3	7.8	107
MA3-180M-4	18.5	25	1470	92.6	92.6	90.7	0.86	35.3	33.5	32.3	120.2	2.0	2.3	7.8	138
MA3-180L-4	22	30	1470	93.0	93.0	91.1	0.86	41.8	39.7	38.3	142.9	2.0	2.3	7.8	153

MA3 IE3(2级能效 GB2)技术参数 TECHNICAL DATA

SPEED 1000RPM 6-POLE 50HZ

型号 Type	额定功率 Rated Output		额定转速 Rated Speed rpm	效率 Efficiency η% (IE3)	效率 75%负载 Efficiency at 75% load	效率 50%负载 Efficiency at 50% load	功率因数 Power factor cosΦ	额定电流 Rated current A			额定转矩 Rated Torque Nm	堵转转矩/额定转矩 Ts/Tn	最大转矩/额定转矩 Tmax/Tn	堵转电流/额定电流 Is/In	重量 Weight kg
	kW	HP						380V	400V	415V					
MA3-632-6	0.12	0.18	855	57.7	57.7	56.5	0.60	0.53	0.50	0.48	1.34	1.8	1.9	3.5	6.2
MA3-711-6	0.18	0.25	855	63.9	63.9	62.6	0.66	0.65	0.62	0.59	2.01	1.9	2.0	4.0	9.3
MA3-712-6	0.25	0.37	855	68.6	68.6	67.2	0.68	0.81	0.77	0.75	2.79	1.9	2.0	4.0	9.7
MA3-801-6	0.37	0.5	890	73.5	73.5	72.0	0.70	1.09	1.04	1.00	3.97	1.9	2.0	4.7	12.2
MA3-802-6	0.55	0.75	890	77.2	77.2	75.7	0.72	1.50	1.43	1.38	5.90	1.9	2.1	4.7	13.2
MA3-90S-6	0.75	1	935	78.9	78.9	77.3	0.71	2.03	1.93	1.86	7.66	2.0	2.1	6.0	14
MA3-90L-6	1.1	1.5	945	81.0	81.0	79.4	0.73	2.83	2.69	2.59	11.1	2.0	2.1	6.0	18
MA3-100L-6	1.5	2	949	82.5	82.5	80.9	0.73	3.78	3.59	3.47	15.1	2.0	2.1	6.5	29.5
MA3-112M-6	2.2	3	955	84.3	84.3	82.6	0.74	5.36	5.09	4.91	22.0	2.0	2.1	6.6	32
MA3-132S-6	3	4	968	85.6	85.6	83.9	0.74	7.20	6.84	6.59	29.6	2.0	2.1	6.8	43
MA3-132M1-6	4	5.5	968	86.8	86.8	85.1	0.74	9.46	8.99	8.66	39.5	2.0	2.1	6.8	49
MA3-132M2-6	5.5	7.5	968	88.0	88.0	86.2	0.75	12.7	12.0	11.6	54.3	2.0	2.1	7.0	59
MA3-160M-6	7.5	10	970	89.1	89.1	87.3	0.79	16.2	15.4	14.8	73.8	2.0	2.1	7.0	82
MA3-160L-6	11	15	970	90.3	90.3	88.5	0.80	23.1	22.0	21.2	108.3	2.0	2.1	7.2	118.5
MA3-180L-6	15	20	978	91.2	91.2	89.4	0.81	30.9	29.3	28.2	146.5	2.0	2.1	7.3	135

SPEED 750RPM 8-POLE 50HZ

型号 Type	额定功率 Rated Output		额定转速 Rated Speed rpm	效率 Efficiency η% (IE3)	效率 75%负载 Efficiency at 75% load	效率 50%负载 Efficiency at 50% load	功率因数 Power factor cosΦ	额定电流 Rated current A			额定转矩 Rated Torque Nm	堵转转矩/额定转矩 Ts/Tn	最大转矩/额定转矩 Tmax/Tn	堵转电流/额定电流 Is/In	重量 Weight kg
	kW	HP						380V	400V	415V					
MA3-712-8	0.12	0.18	605	50.7	50.7	49.7	0.57	0.63	0.60	0.58	1.89	1.8	1.9	2.8	10.6
MA3-801-8	0.18	0.25	650	58.7	58.7	57.5	0.61	0.76	0.73	0.70	2.64	1.8	1.9	3.3	11.7
MA3-802-8	0.25	0.37	650	64.1	64.1	62.8	0.61	0.97	0.92	0.89	3.67	1.8	1.9	3.3	12.5
MA3-90S-8	0.37	0.5	675	69.3	69.3	67.9	0.61	1.33	1.26	1.22	5.23	1.8	1.9	4.0	17.3
MA3-90L-8	0.55	0.75	675	73.0	73.0	71.5	0.61	1.88	1.78	1.72	7.78	1.8	2.0	4.0	21.2
MA3-100L1-8	0.75	1	685	75.0	75.0	73.5	0.67	2.27	2.15	2.08	10.5	1.8	2.0	4.0	29
MA3-100L2-8	1.1	1.5	685	77.7	77.7	76.1	0.69	3.12	2.96	2.85	15.3	1.8	2.0	5.0	30.5
MA3-112M-8	1.5	2	695	79.7	79.7	78.1	0.70	4.08	3.88	3.74	20.6	1.8	2.0	5.0	38.5
MA3-132S-8	2.2	3	710	81.9	81.9	80.3	0.71	5.75	5.46	5.26	29.6	1.8	2.0	6.0	49.5
MA3-132M-8	3	4	710	83.5	83.5	81.8	0.73	7.48	7.10	6.85	40.4	1.8	2.0	6.0	59
MA3-160M1-8	4	5.5	725	84.8	84.8	83.1	0.73	9.82	9.33	8.99	52.7	1.9	2.0	6.0	92
MA3-160M2-8	5.5	7.5	725	86.2	86.2	84.5	0.74	13.1	12.4	12.0	72.4	2.0	2.0	6.0	103
MA3-160L-8	7.5	10	725	87.3	87.3	85.6	0.75	17.4	16.5	15.9	98.8	2.0	2.0	6.0	117
MA3-180L-8	11	15	735	88.6	88.6	86.8	0.75	25.2	23.9	23.0	142.9	2.0	2.0	6.0	123

MA3 IE3(2级能效 GB2)安装及外型尺寸 MOUNTING AND OVERALL DIMENSIONS

IM B3 H56-180

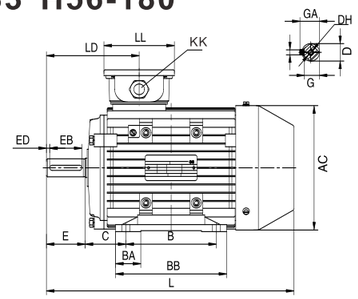

56–90

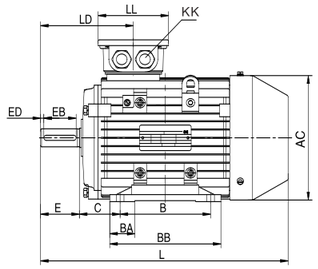

100-180

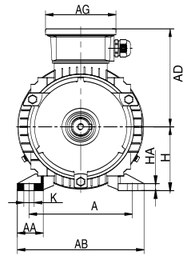

型号 Type	A	AA	AB	AC	AD	AG	B	BA	BB	C	D	DH	E	EB	ED	F	G	GA	H	HA	K	KK	L	LD	LL
56	90	23	111	113	96	86	71	22.5	88	36	9	M4X12	20	16	2	3	7.2	10.2	56	7	5.8X8.3	1–M20X1.5	199	83	86
63	100	24	123	120	102	101	80	25.5	100	40	11	M4X12	23	16	3.5	4	8.5	12.5	63	7	7X9.5	1–M20X1.5	217	95.5	101
71	112	26	138	136	109	101	90	27.5	110	45	14	M5X12	30	25	2.5	5	11	16	71	8	7X11	1–M20X1.5	245	110.5	101
80	125	35	157	158	129	101	100	31	125	50	19	M6X16	40	30	5	6	15.5	21.5	80	8	10X14	1–M25X1.5	290	115	101
90S	140	37	173	175	140	109	100	31.5	125	56	24	M8X19	50	40	5	8	20	27	90	10	10X14	1–M25X1.5	325	145	109
90L	140	37	173	175	140	109	125	31.5	150	56	24	M8X19	50	40	5	8	20	27	90	10	10X14	1–M25X1.5	350	145	109
100L	160	40	196	198	156	109	140	39	172	63	28	M10X22	60	50	5	8	24	31	100	11	12X16	1–M32X1.5	398	148.5	109
112M	190	40	227	230	176	117.5	140	43	180	70	28	M10X22	60	50	5	8	24	31	112	12	12X16	2–M32X1.5	394	154	117.5
132S	216	51	262	258	188	117.5	140	46	186	89	38	M12X28	80	65	7.5	10	33	41	132	15	12X16	2–M32X1.5	445	180	117.5
132M	216	51	262	258	188	117.5	178	46	224	89	38	M12X28	80	65	7.5	10	33	41	132	15	12X16	2–M32X1.5	483	180	117.5
160M	254	55	304	315	242	167	210	50	260	108	42	M16X36	110	90	10	12	37	45	160	18	15X18	2–M40X1.5	589	268.5	167
160L	254	55	304	315	242	167	254	50	304	108	42	M16X36	110	90	10	12	37	45	160	18	15X18	2–M40X1.5	633	268.5	167
180M	279	75	350	355	272	167	241	61	311	121	48	M16X36	110	90	10	14	42.5	51.5	180	22	15X18	2–M40X1.5	727	386	157
180L	279	75	350	355	272	167	279	61	350	121	48	M16X36	110	90	10	14	42.5	51.5	180	22	15X18	2–M40X1.5	765	386	157

IM B5 H56-180

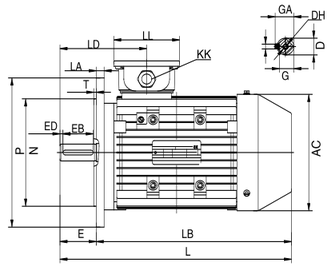

56–90

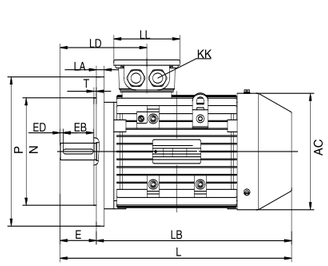

100-180

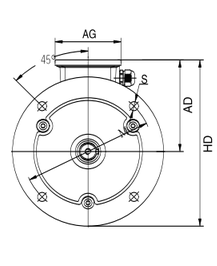

型号 Type	AC	AD	AG	D	DH	E	EB	ED	F	G	GA	HD	METRIC	L	LA	LB	LD	LL	M	N	P	S	T
56	113	96	86	9	M4X12	20	16	2	3	7.2	10.2	156	1–M20X1.5	199	8	179	83	86	100	80	120	7	3
63	120	102	101	11	M4X12	23	16	3.5	4	8.5	12.5	172	1–M20X1.5	217	10	194	95.5	101	115	95	140	10	3
71	136	109	101	14	M5X12	30	25	2.5	5	11	16	189	1–M20X1.5	245	10	215	110.5	101	130	110	160	10	3.5
80	158	129	101	19	M6X16	40	30	5	6	15.5	21.5	229	1–M25X1.5	290	12	250	115	101	165	130	200	12	3.5
90S	175	140	109	24	M8X19	50	40	5	8	20	27	240	1–M25X1.5	325	12	275	145	109	165	130	200	12	3.5
90L	175	140	109	24	M8X19	50	40	5	8	20	27	240	1–M25X1.5	350	12	300	145	109	165	130	200	12	3.5
100L	198	156	109	28	M10X22	60	50	5	8	24	31	281	1–M32X1.5	398	13	338	148.5	109	215	180	250	14.5	4
112M	230	176	117.5	28	M10X22	60	50	5	8	24	31	301	2–M32X1.5	394	14	334	154	117.5	215	180	250	14.5	4
132S	258	188	117.5	38	M12X28	80	65	7.5	10	33	41	338	2–M32X1.5	445	14	365	180	117.5	265	230	300	14.5	4
132M	258	188	117.5	38	M12X28	80	65	7.5	10	33	41	338	2–M32X1.5	483	14	403	180	117.5	265	230	300	14.5	4
160M	315	242	167	42	M16X36	110	90	10	12	37	45	417	2–M40X1.5	589	15	479	268.5	167	300	250	350	18.5	5
160L	315	242	167	42	M16X36	110	90	10	12	37	45	417	2–M40X1.5	633	15	523	268.5	167	300	250	350	18.5	5
180M	355	272	167	48	M16X36	110	90	10	14	42.5	51.5	447	2–M40X1.5	727	15	617	386	157	300	250	350	18.5	5
180L	355	272	167	48	M16X36	110	90	10	14	42.5	51.5	447	2–M40X1.5	765	15	655	386	157	300	250	350	18.5	5

MA3 IE3(2级能效 GB2)安装及外型尺寸 MOUNTING AND OVERALL DIMENSIONS

IM B35 H56-180

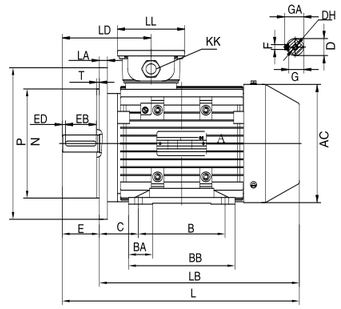

56–90

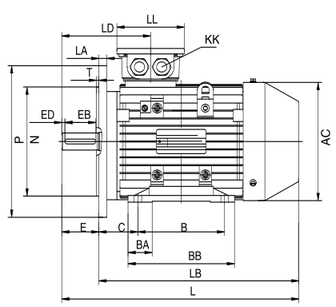

100-180

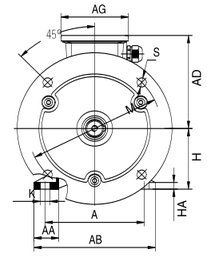

型号 Type	A	AA	AB	AC	AD	AG	B	BA	BB	C	D	DH	E	EB	ED	F	G	GA	H	HA	K	METRIC	L	LA	LB	LD	LL	M	N	P	S	T
56	90	23	111	113	96	86	71	22.5	88	36	9	M4X12	20	16	2	3	7.2	10.2	56	7	5.8X8.3	1–M20X1.5	199	8	179	83	86	100	80	120	7	3
63	100	24	123	120	102	101	80	25.5	100	40	11	M4X12	23	16	3.5	4	8.5	12.5	63	7	7X9.5	1–M20X1.5	217	10	194	95.5	101	115	95	140	10	3
71	112	26	138	136	109	101	90	27.5	110	45	14	M5X12	30	25	2.5	5	11	16	71	8	7X11	1–M20X1.5	245	10	215	110.5	101	130	110	160	10	3.5
80	125	35	157	158	129	101	100	31	125	50	19	M6X16	40	30	5	6	15.5	21.5	80	8	10X14	1–M25X1.5	290	12	250	115	101	165	130	200	12	3.5
90S	140	37	173	175	140	109	100	31.5	125	56	24	M8X19	50	40	5	8	20	27	90	10	10X14	1–M25X1.5	325	12	275	145	109	165	130	200	12	3.5
90L	140	37	173	175	140	109	125	31.5	150	56	24	M8X19	50	40	5	8	20	27	90	10	10X14	1–M25X1.5	350	12	300	145	109	165	130	200	12	3.5
100L	160	40	196	198	156	109	140	39	172	63	28	M10X22	60	50	5	8	24	31	100	11	12X16	1–M32X1.5	398	13	338	148.5	109	215	180	250	14.5	4
112M	190	40	227	230	176	117.5	140	43	180	70	28	M10X22	60	50	5	8	24	31	112	12	12X16	2–M32X1.5	394	14	334	154	117.5	215	180	250	14.5	4
132S	216	51	262	258	188	117.5	140	46	186	89	38	M12X28	80	65	7.5	10	33	41	132	15	12X16	2–M32X1.5	445	14	365	180	117.5	265	230	300	14.5	4
132M	216	51	262	258	188	117.5	178	46	224	89	38	M12X28	80	65	7.5	10	33	41	132	15	12X16	2–M32X1.5	483	14	403	180	117.5	265	230	300	14.5	4
160M	254	55	304	315	242	167	210	50	260	108	42	M16X36	110	90	10	12	37	45	160	18	15X18	2–M40X1.5	589	15	479	268.5	167	300	250	350	18.5	5
160L	254	55	304	315	242	167	254	50	304	108	42	M16X36	110	90	10	12	37	45	160	18	15X18	2–M40X1.5	633	15	523	268.5	167	300	250	350	18.5	5
180M	279	75	350	355	272	167	241	61	311	121	48	M16X36	110	90	10	14	42.5	51.5	180	22	15X18	2–M40X1.5	727	15	617	386	157	300	250	350	18.5	5
180L	279	75	350	355	272	167	279	61	350	121	48	M16X36	110	90	10	14	42.5	51.5	180	22	15X18	2–M40X1.5	765	15	655	386	157	300	250	350	18.5	5

IM B34A H56-160

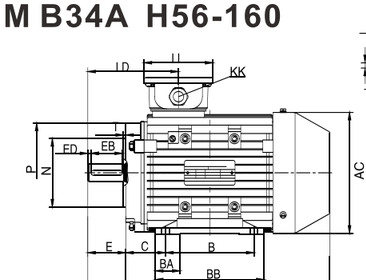

56–90

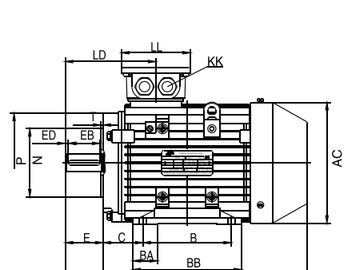

100-160

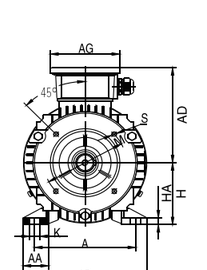

型号 Type	A	AA	AB	AC	AD	AG	B	BA	BB	C	D	DH	E	EB	ED	F	G	GA	H	HA	K	METRIC	L	LB	LD	LL	M	N	P	S	T
56	90	23	111	113	96	86	71	22.5	88	36	9	M4X12	20	16	2	3	7.2	10.2	56	7	5.8X8.3	1–M20X1.5	199	179	83	86	65	50	80	M5	2.5
63	100	24	123	120	102	101	80	25.5	100	40	11	M4X12	23	16	3.5	4	8.5	12.5	63	7	7X9.5	1–M20X1.5	217	194	95.5	101	75	60	90	M5	2.5
71	112	26	138	136	109	101	90	27.5	110	45	14	M5X12	30	25	2.5	5	11	16	71	8	7X11	1–M20X1.5	245	215	110.5	101	85	70	105	M6	2.5
80	125	35	157	158	129	101	100	31	125	50	19	M6X16	40	30	5	6	15.5	21.5	80	8	10X14	1–M25X1.5	290	250	115	101	100	80	120	M6	3
90S	140	37	173	175	140	109	100	31.5	125	56	24	M8X19	50	40	5	8	20	27	90	10	10X14	1–M25X1.5	325	275	145	109	115	95	140	M8	3
90L	140	37	173	175	140	109	125	31.5	150	56	24	M8X19	50	40	5	8	20	27	90	10	10X14	1–M25X1.5	350	300	145	109	115	95	140	M8	3
100L	160	40	196	198	156	109	140	39	172	63	28	M10X22	60	50	5	8	24	31	100	11	12X16	1–M32X1.5	398	338	148.5	109	130	110	160	M8	3.5
112M	190	40	227	230	176	117.5	140	43	180	70	28	M10X22	60	50	5	8	24	31	112	12	12X16	2–M32X1.5	394	334	154	117.5	130	110	160	M8	3.5
132S	216	51	262	258	188	117.5	140	46	186	89	38	M12X28	80	65	7.5	10	33	41	132	15	12X16	2–M32X1.5	445	365	180	117.5	165	130	200	M10	3.5
132M	216	51	262	258	188	117.5	178	46	224	89	38	M12X28	80	65	7.5	10	33	41	132	15	12X16	2–M32X1.5	483	403	180	117.5	165	130	200	M10	3.5
160M	254	55	304	315	242	167	210	50	260	108	42	M16X36	110	90	10	12	37	45	160	18	15X18	2–M40X1.5	589	479	268.5	167	215	180	250	M12	4
160L	254	55	304	315	242	167	254	50	304	108	42	M16X36	110	90	10	12	37	45	160	18	15X18	2–M40X1.5	633	523	268.5	167	215	180	250	M12	4

MA3 IE3(2级能效 GB2)安装及外型尺寸 MOUNTING AND OVERALL DIMENSIONS

IM B14A H56-160

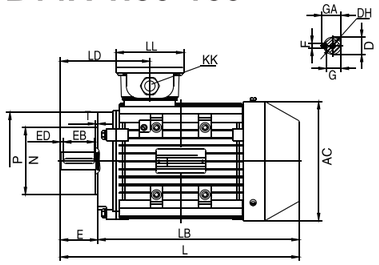

56-90

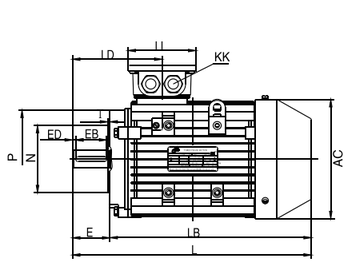

100-160

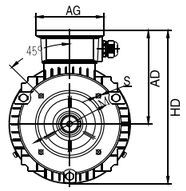

型号 Type	AC	AD	AG	D	DH	E	EB	ED	F	G	GA	HD	METRIC	L	LB	LD	LL	M	N	P	S	T
56	113	96	86	9	M4X12	20	16	2	3	7.2	10.2	152.5	1–M20X1.5	199	179	83	86	65	50	80	M5	2.5
63	120	102	101	11	M4X12	23	16	3.5	4	8.5	12.5	162	1–M20X1.5	217	194	95.5	101	75	60	90	M5	2.5
71	136	109	101	14	M5X12	30	25	2.5	5	11	16	177	1–M20X1.5	245	215	110.5	101	85	70	105	M6	2.5
80	158	129	101	19	M6X16	40	30	5	6	15.5	21.5	208	1–M25X1.5	290	250	115	101	100	80	120	M6	3
90S	175	140	109	24	M8X19	50	40	5	8	20	27	227.5	1–M25X1.5	325	275	145	109	115	95	140	M8	3
90L	175	140	109	24	M8X19	50	40	5	8	20	27	227.5	1–M25X1.5	350	300	145	109	115	95	140	M8	3
100L	198	156	109	28	M10X22	60	50	5	8	24	31	255	1–M32X1.5	398	338	148.5	109	130	110	160	M8	3.5
112M	230	176	117.5	28	M10X22	60	50	5	8	24	31	291	2–M32X1.5	394	334	154	117.5	130	110	160	M8	3.5
132S	258	188	117.5	38	M12X28	80	65	7.5	10	33	41	317	2–M32X1.5	445	365	180	117.5	165	130	200	M10	3.5
132M	258	188	117.5	38	M12X28	80	65	7.5	10	33	41	317	2–M32X1.5	483	403	180	117.5	165	130	200	M10	3.5
160M	315	242	167	42	M16X36	110	90	10	12	37	45	399.5	2–M40X1.5	589	479	268.5	167	215	180	250	M12	4
160L	315	242	167	42	M16X36	110	90	10	12	37	45	399.5	2–M40X1.5	633	523	268.5	167	215	180	250	M12	4

IM B34B H56-160

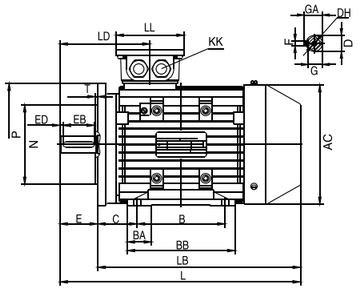

56-90

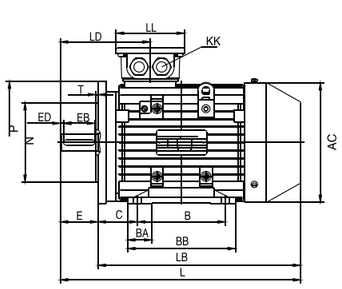

100-160

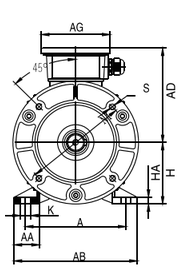

型号 Type	A	AA	AB	AC	AD	AG	B	BA	BB	C	D	DH	E	EB	ED	F	G	GA	H	HA	K	METRIC	L	LB	LD	LL	M	N	P	S	T
56	90	23	111	113	96	86	71	22.5	88	36	9	M4X12	20	16	2	3	7.2	10.2	56	7	5.8X8.3	1–M20X1.5	199	179	83	86	85	70	105	M6	2.5
63	100	24	123	120	102	101	80	25.5	100	40	11	M4X12	23	16	3.5	4	8.5	12.5	63	7	7X9.5	1–M20X1.5	217	194	95.5	101	100	80	120	M6	3
71	112	26	138	136	109	101	90	27.5	110	45	14	M5X12	30	25	2.5	5	11	16	71	8	7X11	1–M20X1.5	245	215	110.5	101	115	95	140	M8	3
80	125	35	157	158	129	101	100	31	125	50	19	M6X16	40	30	5	6	15.5	21.5	80	8	10X14	1–M25X1.5	290	250	115	101	130	110	160	M8	3.5
90S	140	37	173	175	140	109	100	31.5	125	56	24	M8X19	50	40	5	8	20	27	90	10	10X14	1–M25X1.5	325	275	145	109	130	110	160	M8	3.5
90L	140	37	173	175	140	109	125	31.5	150	56	24	M8X19	50	40	5	8	20	27	90	10	10X14	1–M25X1.5	350	300	145	109	130	110	160	M8	3.5
100L	160	40	196	198	156	109	140	39	172	63	28	M10X22	60	50	5	8	24	31	100	11	12X16	1–M32X1.5	398	338	148.5	109	165	130	200	M10	3.5
112M	190	40	227	230	176	117.5	140	43	180	70	28	M10X22	60	50	5	8	24	31	112	12	12X16	2–M32X1.5	394	334	154	117.5	165	130	200	M10	3.5
132S	216	51	262	258	188	117.5	140	46	186	89	38	M12X28	80	65	7.5	10	33	41	132	15	12X16	2–M32X1.5	445	365	180	117.5	215	180	250	M12	4
132M	216	51	262	258	188	117.5	178	46	224	89	38	M12X28	80	65	7.5	10	33	41	132	15	12X16	2–M32X1.5	483	403	180	117.5	215	180	250	M12	4
160M	254	55	304	315	242	167	210	50	260	108	42	M16X36	110	90	10	12	37	45	160	18	15X18	2–M40X1.5	589	479	268.5	167	265	230	300	M12	4
160L	254	55	304	315	242	167	254	50	304	108	42	M16X36	110	90	10	12	37	45	160	18	15X18	2–M40X1.5	633	523	268.5	167	265	230	300	M12	4

MA3 IE3(2级能效 GB2)安装及外型尺寸 MOUNTING AND OVERALL DIMENSIONS

IM B14B H56-160

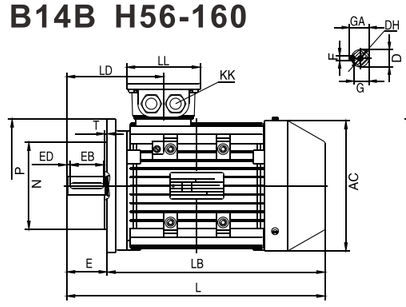

56-90

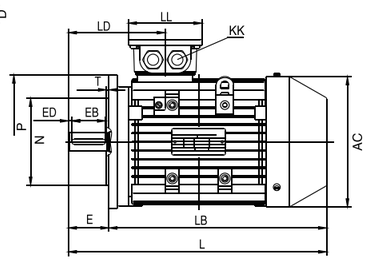

100-160

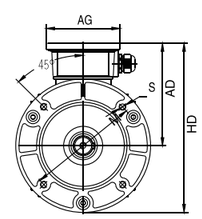

型号 Type	AC	AD	AG	D	DH	E	EB	ED	F	G	GA	HD	METRIC	L	LB	LD	LL	M	N	P	S	T
56	113	96	86	9	M4X12	20	16	2	3	7.2	10.2	152.5	1–M20X1.5	199	179	83	86	85	70	105	M6	2.5
63	120	102	101	11	M4X12	23	16	3.5	4	8.5	12.5	162	1–M20X1.5	217	194	95.5	101	100	80	120	M6	3
71	136	109	101	14	M5X12	30	25	2.5	5	11	16	179	1–M20X1.5	245	215	110.5	101	115	95	140	M8	3
80	158	129	101	19	M6X16	40	30	5	6	15.5	21.5	209	1–M25X1.5	290	250	115	101	130	110	160	M8	3.5
90S	175	140	109	24	M8X19	50	40	5	8	20	27	227.5	1–M25X1.5	325	275	145	109	130	110	160	M8	3.5
90L	175	140	109	24	M8X19	50	40	5	8	20	27	227.5	1–M25X1.5	350	300	145	109	130	110	160	M8	3.5
100L	198	156	109	28	M10X22	60	50	5	8	24	31	256	1–M32X1.5	398	338	148.5	109	165	130	200	M10	3.5
112M	230	176	117.5	28	M10X22	60	50	5	8	24	31	291	2–M32X1.5	394	334	154	117.5	165	130	200	M10	3.5
132S	258	188	117.5	38	M12X28	80	65	7.5	10	33	41	317	2–M32X1.5	445	365	180	117.5	215	180	250	M12	4
132M	258	188	117.5	38	M12X28	80	65	7.5	10	33	41	317	2–M32X1.5	483	403	180	117.5	215	180	250	M12	4
160M	315	242	167	42	M16X36	110	90	10	12	37	45	399.5	2–M40X1.5	589	479	268.5	167	265	230	300	M12	4
160L	315	242	167	42	M16X36	110	90	10	12	37	45	399.5	2–M40X1.5	633	523	268.5	167	265	230	300	M12	4